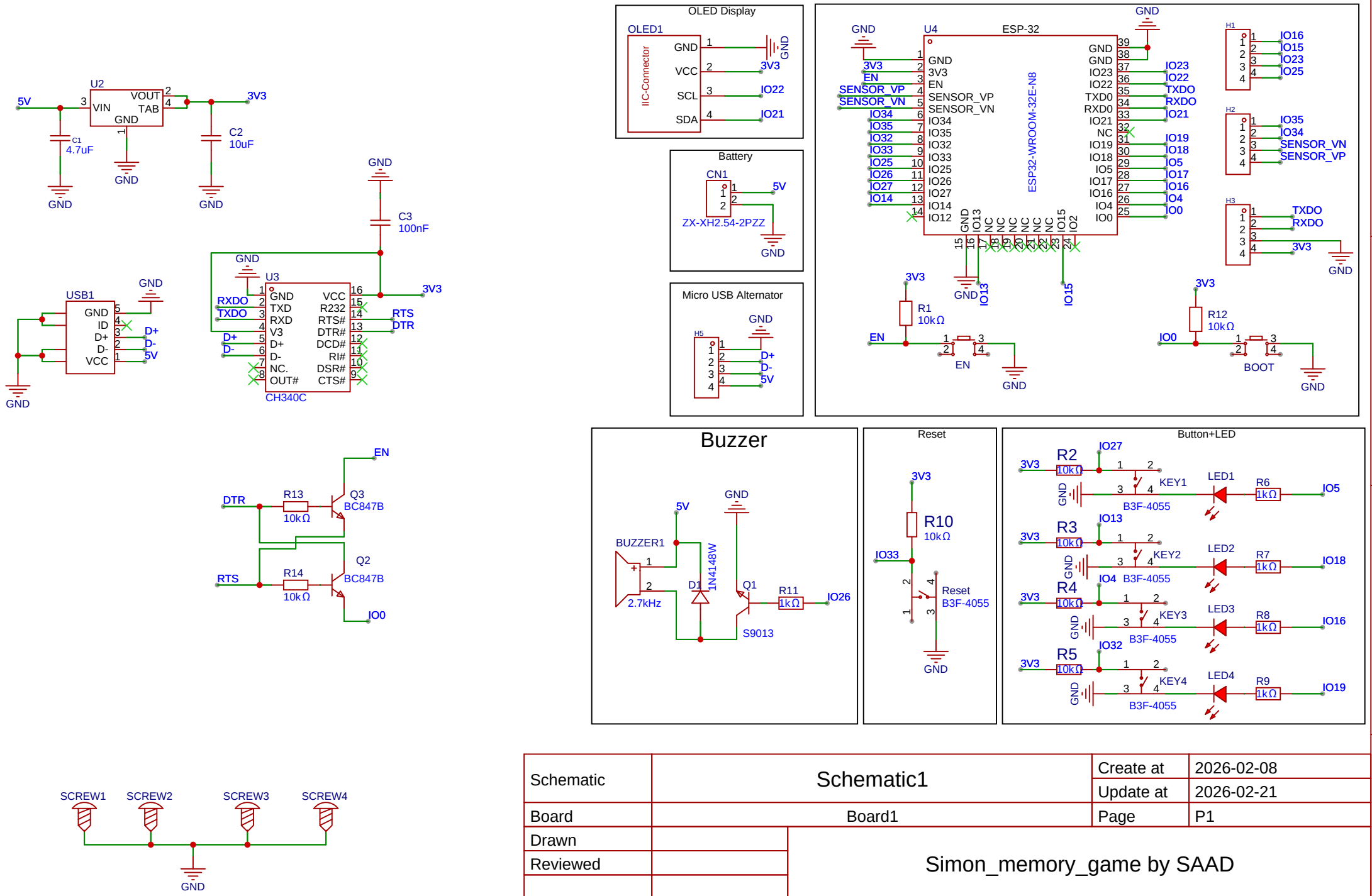

Schematic	Schematic1	Create at	2026-02-08
		Update at	2026-02-21
Board	Board1	Page	P1
Drawn		Simon_memory_game by SAAD	
Reviewed			
		Version	Size	Page 1 Total 1
EasyEDA		V1.0	A4	EasyEDA.com